REVISIONS			
REV.	DESCRIPTION	DATE	APPROVED

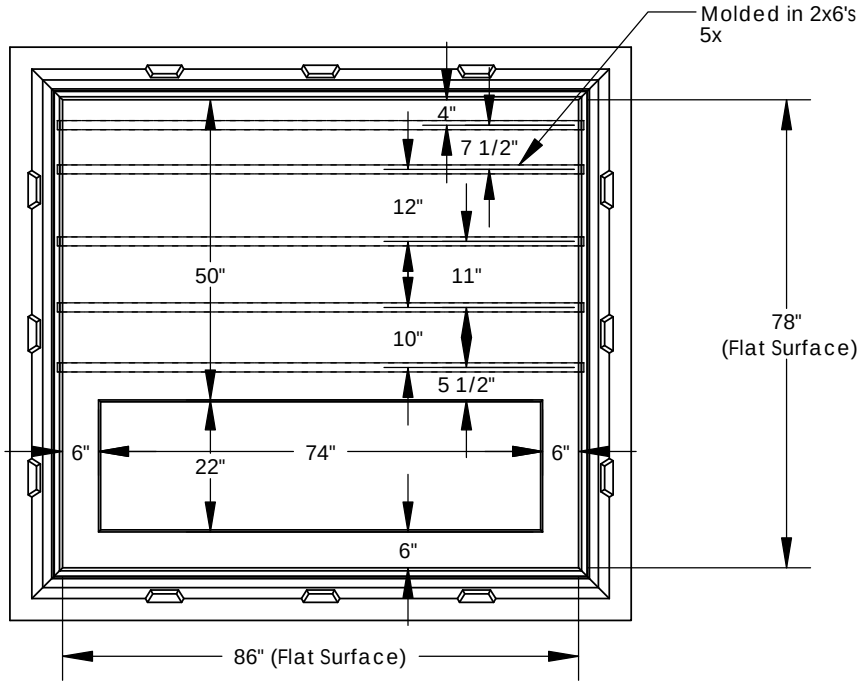

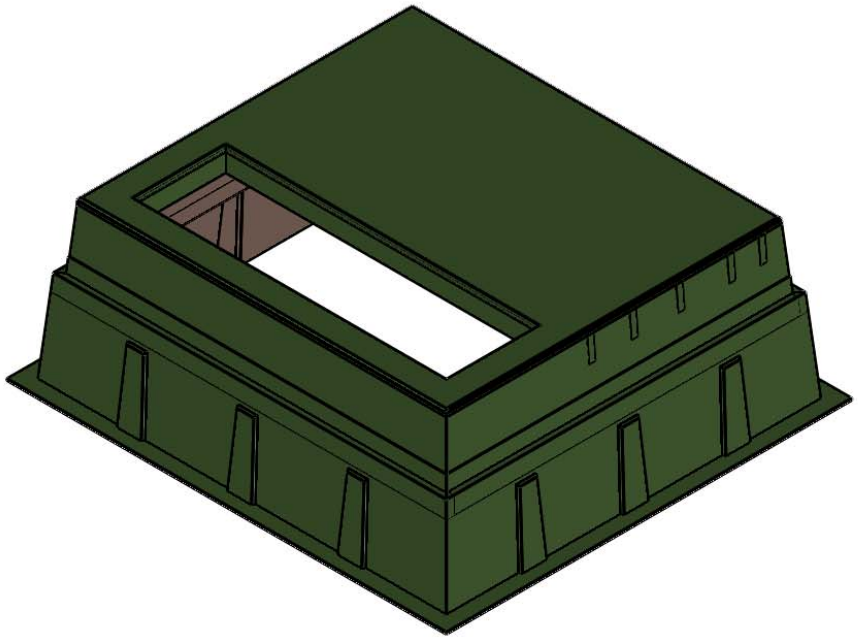

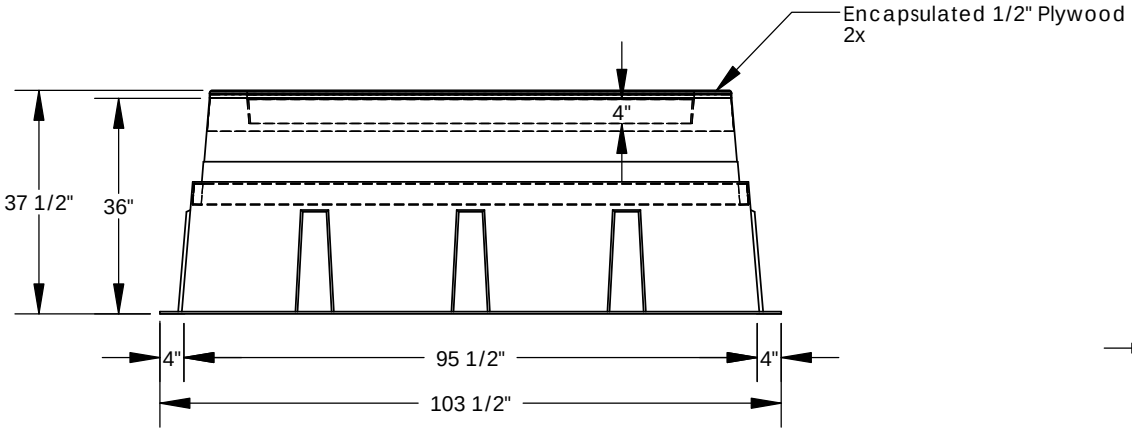

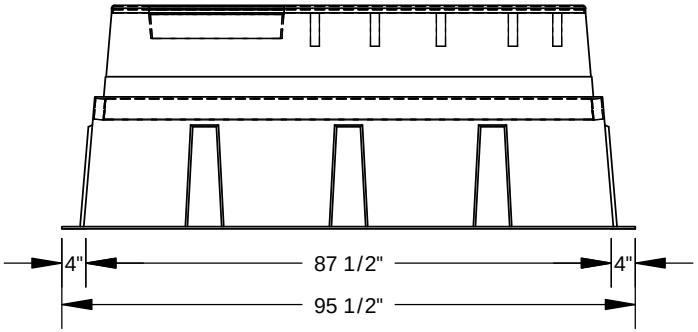

Proper installation of this box pad requires the soil to have a compaction level of 98% prior to setting the box pad. If that is not achievable, a concrete pad/footing must be poured underneath the box pad prior to installation.

Nordic Fiberglass, Inc.
21415 US Hwy 75 NW, Warren, MN 56762
www.nordicfiberglass.com
218-745-5095 ph. --- 218-745-4990 fax

Customer Name: N/A

DIMENSIONS ARE IN INCHES
TOLERANCES: ANGLES ± 1°
FRACTIONAL ± 1/2
ONE PLACE DECIMAL ±.060
TWO PLACE DECIMAL ±.030
THREE PLACE DECIMAL ±.015

MATERIAL

	NAME	DATE
DRAWN	R.L.J.	08/22/17
CHECKED	-.-.-	--/--/--

GS-86-78-36RT2-2X-MG-74x22

SIZE	ITEM ID:	REV.
A	02015.20	REL-01
SCALE:1:30		SHEET 1 OF 1

PROPRIETARY AND CONFIDENTIAL
THE INFORMATION CONTAINED IN THIS DRAWING IS THE SOLE PROPERTY OF NORDIC FIBERGLASS, INC. ANY REPRODUCTION IN PART OR AS A WHOLE WITHOUT THE WRITTEN PERMISSION OF NORDIC FIBERGLASS, INC. IS PROHIBITED.