REVISIONS			
REV.	DESCRIPTION	DATE	APPROVED
REL-01		7/23/2009	
REL-02	Added (1) 2x6	2/1/2013	M.F.K.
REL-03	Updated From RT-2X to RT2-2X	11/10/2025	C.T.C.

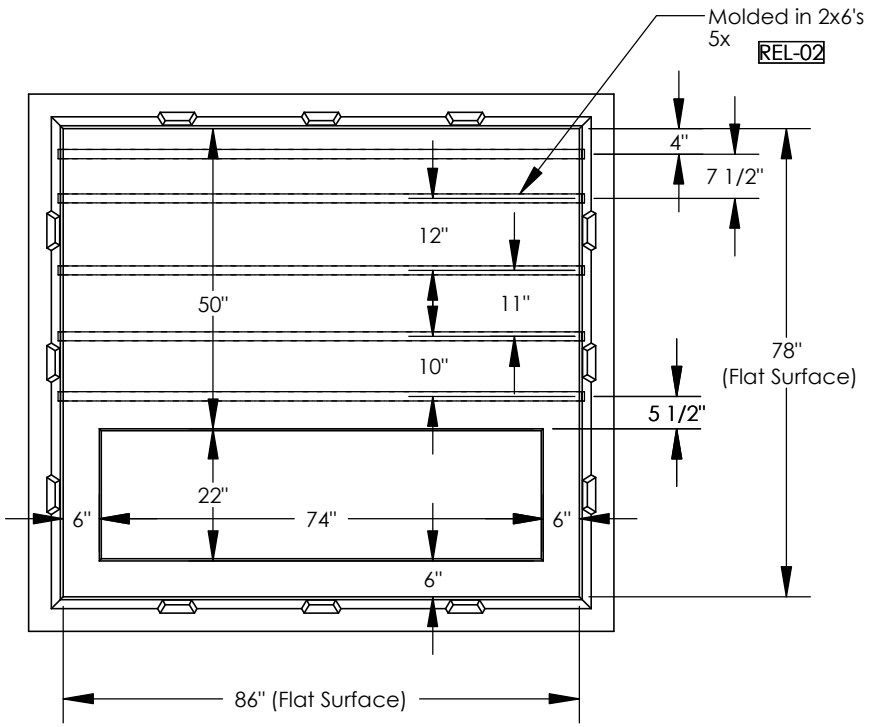

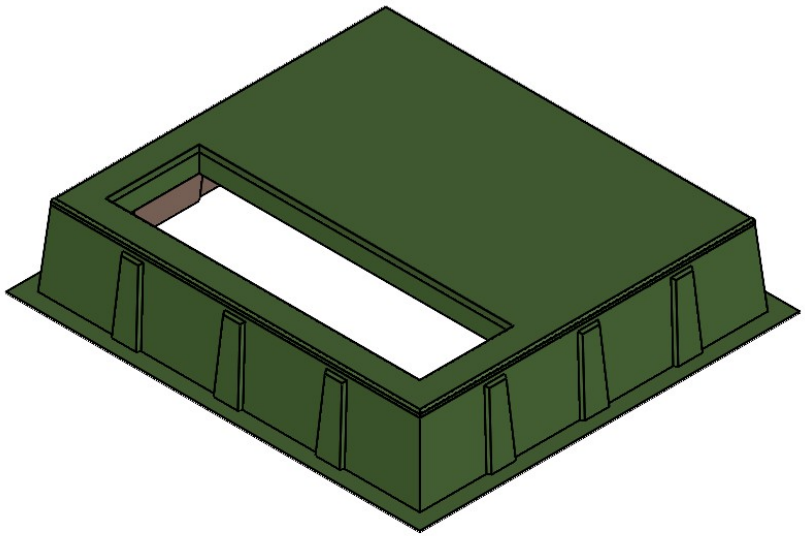

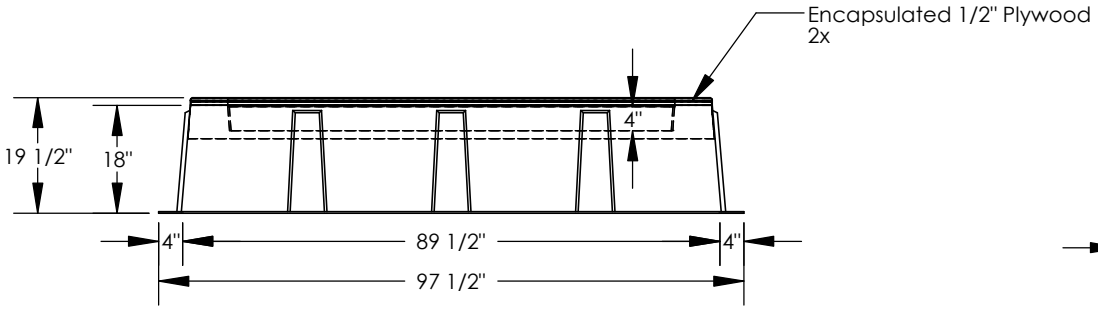

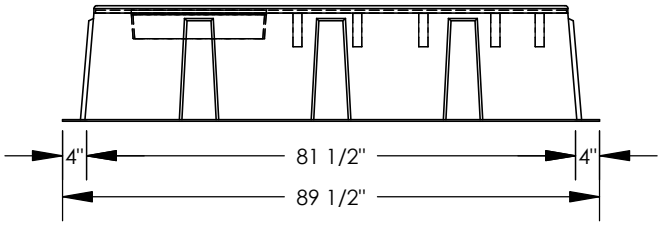

Proper installation of a box pad for transformers over 9,000 lbs. requires the soil to have a compaction level of 98% prior to setting the box pad. If that is not achievable, a cement pad/footing must be poured underneath the box pad prior to installation.

Nordic Fiberglass, Inc.
21415 US Hwy 75 NW, Warren, MN 56762
www.nordicfiberglass.com
218-745-5095 ph. --- 218-745-4990 fax

PROPRIETARY AND CONFIDENTIAL
THE INFORMATION CONTAINED IN THIS DRAWING IS THE SOLE PROPERTY OF NORDIC FIBERGLASS, INC. ANY REPRODUCTION IN PART OR AS A WHOLE WITHOUT THE WRITTEN PERMISSION OF NORDIC FIBERGLASS, INC. IS PROHIBITED.

Customer Name: N/A

DIMENSIONS ARE IN INCHES
TOLERANCES: ANGLES ± 1°
FRACTIONAL ± 1/2
ONE PLACE DECIMAL ±.060
TWO PLACE DECIMAL ±.030
THREE PLACE DECIMAL ±.015

MATERIAL

	NAME	DATE
DRAWN	R.L.J.	07/23/09
CHECKED	-.-.-	--/--/--

GS-86-78-18RT2-2X-MG-74x22

SIZE A | ITEM ID: 02015.05 | REV. REL-03

SCALE:1:30 | SHEET 1 OF 1